Engineering Laboratory

December 13, 2010
MBE-TDP Summit
Gaithersburg, MD

Product Manufacturing Information (PMI) Modeling & Testing

Dr. Vijay Srinivasan
Chief, Manufacturing Systems Integration Division
Engineering Laboratory
National Institute of Standards and Technology
U.S. Department of Commerce

Engineering Laboratory Organization

Manufacturing Systems Integration Division

Will continue to invest in

- Systems Integration for Manufacturing and Construction Applications (SIMCA)
  - Information Modeling & Testing
    - Product Manufacturing Information (PMI) Modeling & Testing

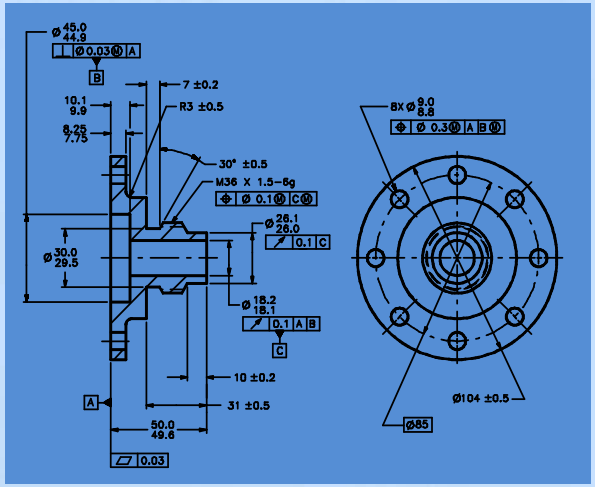

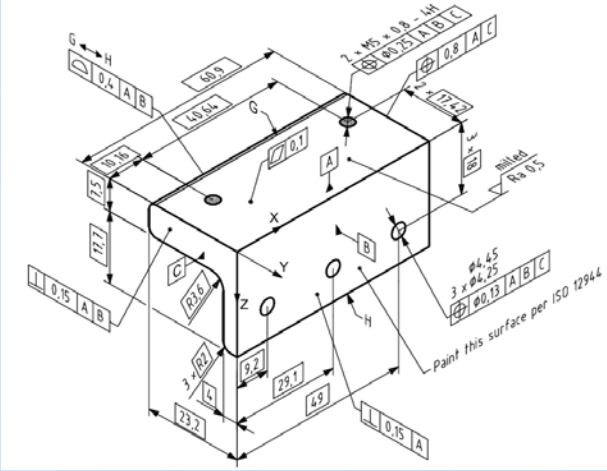

Apps

- Smart Manufacturing Systems (e.g., STEP NC)
- Physical & Computational Metrology (e.g., CMM)

DARPA and DDR&E Initiatives

- DARPA GRID (Geometric Representation Integrated Dataspace) Initiative
  - Program Manager: Todd Hughes
  - Mathematical foundations and pragmatic implications for a standard to integrate Manufacturing, Military & Medical geometric information.
- DDR&E Systems 2020 Initiative
  - More from Scott Lucero later today …
  - Model Based Engineering (MBE) is a key component of Systems 2020.

GRID-Compatible Representations for Manufacturing (with a view towards ISR and Medical Imaging)

OBJECTIVES

- Rigorous semantics for GRID
- Efficient encoding & decoding
- Presentation formats of progressive fidelity

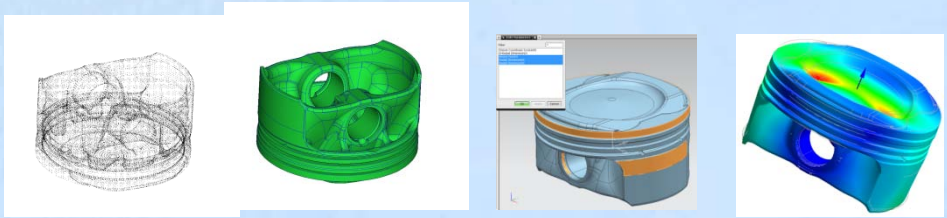

EVALUATION SHAPE COMPREHENSION

Leverage existing approaches, exploit gaps

STATUS

- Surveying the field and high level conceptualizations
- Identifying high impact applications and research issues
- Fleshing out fundamental abstractions supported by rigorous mathematics
- Identifying gaps and opportunities

KEY CHALLENGES

- Negotiate diversity of purpose : generality vs. application-specific needs
- Reconcile different scales and resolutions in shape representation and evaluation
- Quantify criteria and methods for ingestion of sensory data and shape comprehension

PERFORMERS

Government Partner	Technical Performer
NIST (V. Srinivasan)	C. Hoffmann, Purdue U. V. Shapiro, U. of Wisconsin

Systems 2020
Designing DoD Systems for Adaptability

Design Disciplines

Platform Based Engineering
Using a common core platform to develop many related systems/capabilities

Trusted System Design
Developing trusted systems from untrusted components

Design Framework

Model Based Engineering
Using modeling and simulation for rapid, concurrent, integrated system development and manufacturing

Adaptable DoD Systems

Capability on Demand
Real-time Adaptive Systems
Rapidly Reconfigurable Systems
Pre-planned Disposable Systems

DISTRIBUTION STATEMENT A -- Cleared for public release by OSR on XX October 2010 -- SR case number #10-S-#### applies.

engineering laboratory

PMI: The big picture …

ISO & ASME issue PMI (inc. GD&T) standards

CAD vendors implement them
- First in drafting mode
- Then in 3D models (data models), sometimes…

ISO develops exchange standards
- STEP
- PDF
- JT ?

Software vendors implement exchange standards

PMI 1.0 (Pre-Dec. 31, 2009)

ISO & ASME issue PMI (inc. GD&T) standards √

CAD vendors implement them √
- First in drafting mode
- Then in 3D models (inc. data models), sometimes…

ISO develops exchange standards
- STEP
- PDF
- JT ?

In progress

Software vendors implement exchange standards

In progress

We have traditionally run our manufacturing industry using information about engineering objects in the form of drawings and documents

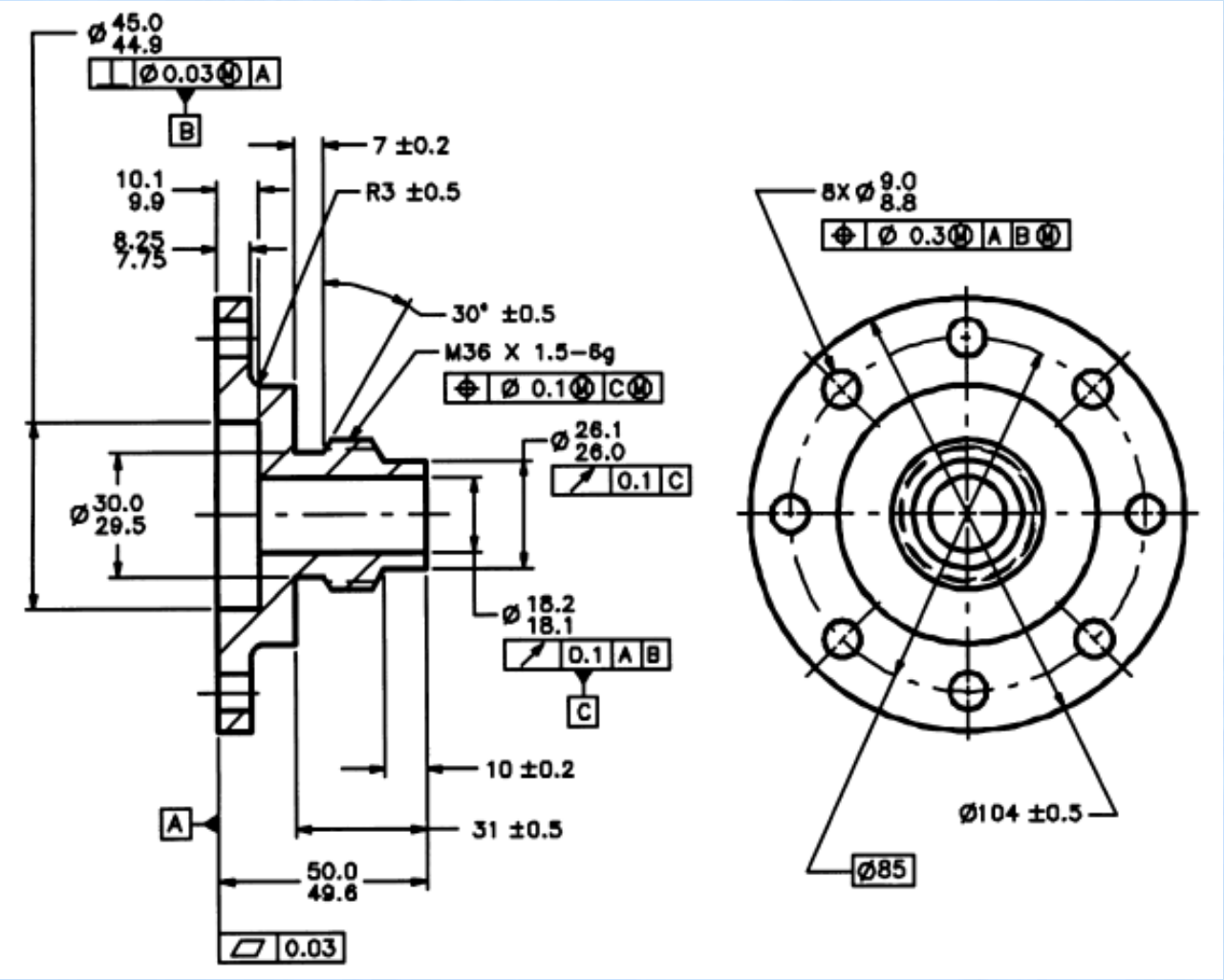

- Engineering drawing with GD&T, surface texture, and annotations
- NIST is actively involved in developing standards for
  - PMI and their related
  - Measurements and inspection

ASME Y14.5
ASME Y14.5.1
ASME B 89
ASME B 46
ISO 1101
ISO TC 213

Now we want to run our manufacturing industry using information about engineering objects as models

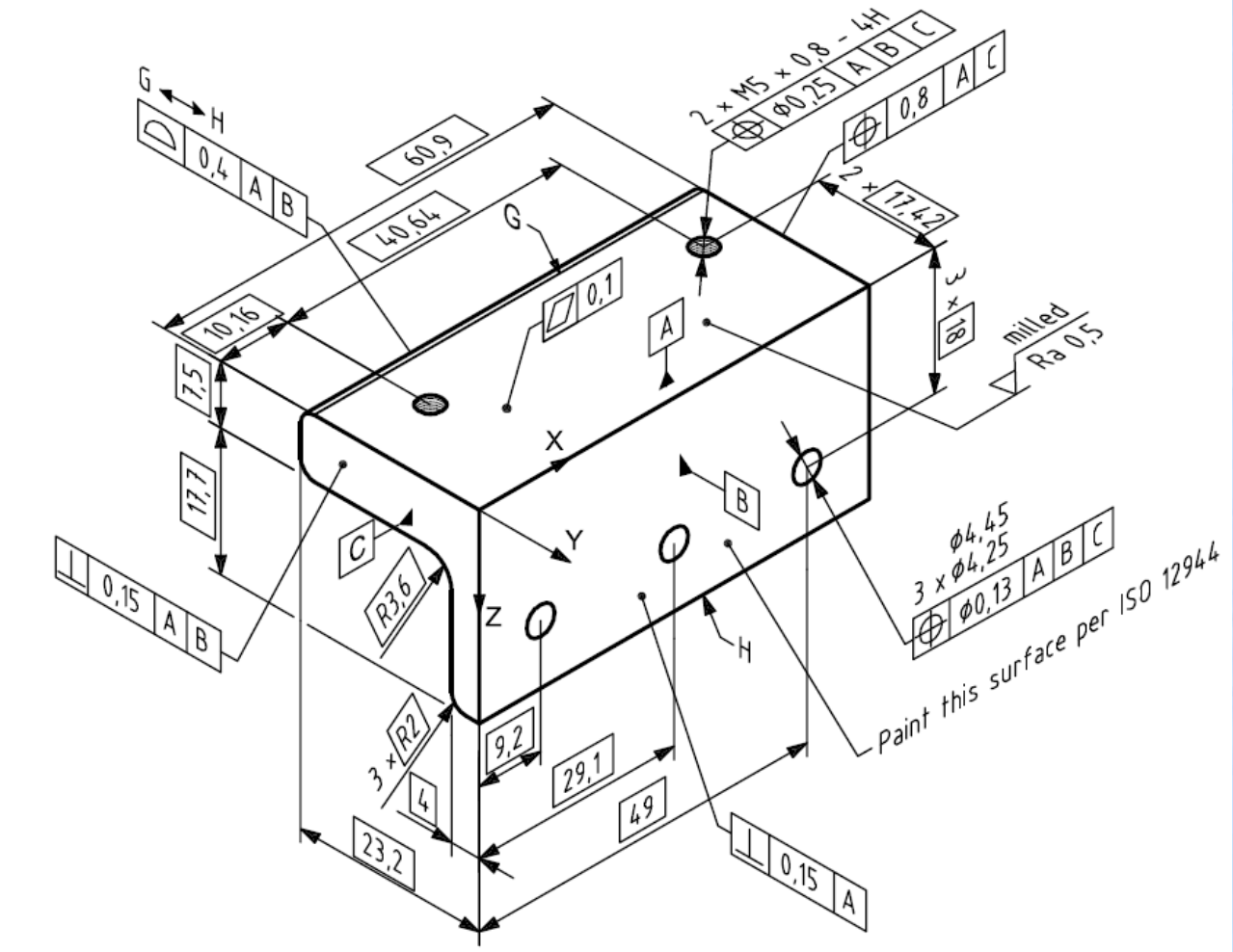

- 3D CAD models with GD&T, surface texture, and annotations
- NIST is actively involved in developing standards for
  - 3D models for nominal parts, and
  - models for PMI

ISO STEP
ASME Y14.41
ISO 16792
ISO TC 213

The American Society of Mechanical Engineers

AN AMERICAN NATIONAL STANDARD

DIGITAL PRODUCT DEFINITION DATA PRACTICES

ASME Y14.41-2003

INTERNATIONAL STANDARD

ISO 16792

First edition
2006-12-15

Technical product documentation — Digital product definition data practices

Documentation technique de produits — Données de définition d'un produit

PMI Semantics Validation Testing

- Contracted with ITI TranscenData through SCRA
  - Additional support from LOTAR and CAx-IF
- Project objective: Accelerate commercial development of STEP PMI translators by providing comprehensive semantic validation.

Related Projects

- CATIA V5 PMI Stability Testing (CAD system upgrade validation)
  - Presentation of commercial project results to COE A&D (Oct 2010)
- Boeing EID PDF Export Validation
  - CATIA V5 to PDF/U3D produced by Right Hemisphere
  - Model structure, geometry, properties and PMI graphics (Nov 2010)
- OSD (NIST) 3D MBE TDP Validation
  - ISO PDQ-S PMI quality criteria draft proposal delivered (Oct 2010)
  - Native CAD to STEP, PDF/PRC and JT geometry validation (2011)
- NIST MBE PMI Validation
  - Native CAD to STEP, PDF/PRC and JT
  - PMI graphics and semantics validation (2011)
- JT Implementors Forum
  - Native CAD to JT to Target CAD
  - Model structure and geometry (2010) and PMI (2011)
- ProSTEP JT-STEP Consulting
  - Detailed mapping of JT 9.5 to STEP AP242 (Dec 2010)

OSD (NIST) 3D MBE TDP Validation
ISO PDQ-S Edition 2 Proposal for PMI Quality Criteria

Discontinuous All-Around Geometry

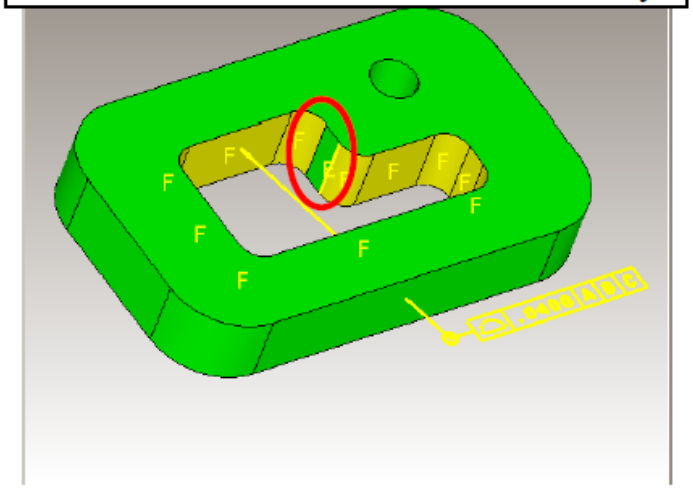
F
F
F

OSD (NIST) 3D MBE TDP Validation and NIST MBE PMI Validation

Proposed 3D MBE TDP Validation Framework for ITI CADIQ Year 2 (2010 - 2011)				
	3D Native Model Quality		3D Derivative Model Equivalence	
Parts and Assemblies	**Valid for Data Exchange**	**Valid for Mfg**	**Precise Equivalent**	**Graphical Equivalent**
Structure	CATIA V5 NX ProE	CATIA V5 NX ProE	STEP PDF JT PV	PDF JT PV
Geometry	CATIA V5 NX ProE	CATIA V5 NX ProE	STEP PDF JT PV	PDF JT PV
3D Dimensioning and Tolerancing (GD&T)	CATIA V5 NX ProE	CATIA V5 NX ProE	STEP PDF JT PV	STEP PDF JT PV
Other Annotations	out of scope	out of scope	out of scope	out of scope
Product data	out of scope	out of scope	out of scope	out of scope

Black items leverage software development completed for other projects/customers
Red items require sponsorship funding to initiate development

Development of native model quality testing and STEP derivative equivalence validation was completed in 2010. PDF, JT and Product View validation proposed for 2011.

PMI 2.0 (Post-Jan.1, 2010)

ISO & ASME issue PMI (inc. GD&T) standards

In progress

CAD vendors implement them
- First in drafting mode
- Then in 3D models (inc. data models), sometimes…

In progress

ISO develops exchange standards
- STEP
- PDF
- JT ?

Software vendors implement exchange standards

There will be many ways to define and measure size

Geometrical product specifications (GPS) — Dimensional tolerancing —

Part 1:
Linear sizes

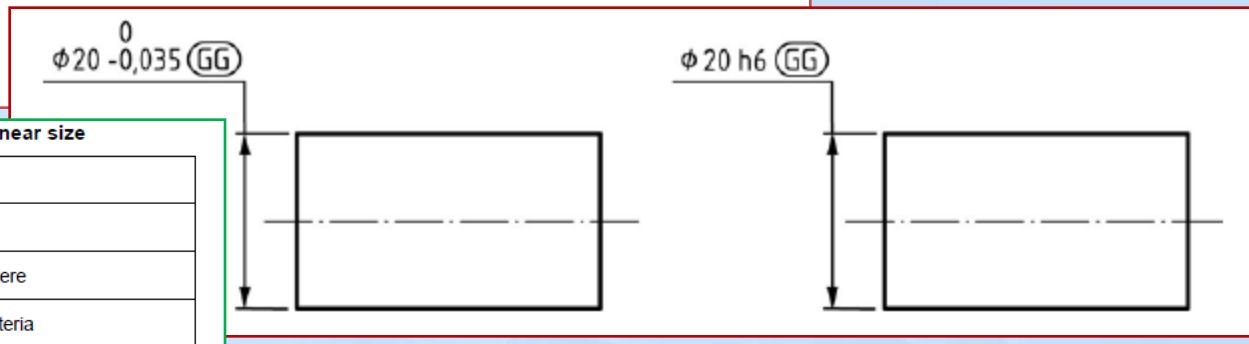

Table 1 — Specification modifiers for linear size

Modifier	Description
LP	Two-point size
LS	Local size defined by a sphere
GG	Least square association criteria
GX	Maximum inscribed association criteria
GN	Minimum circumscribed association criteria
CC	Circumference diameter (Calculated size)
CA	Area diameter (Calculated size)
CV	Volume diameter (Calculated size)
SX	Maximum (rank order) size[a]
SN	Minimum (rank order) size[a]
SA	Average (rank order) size[a]
SM	Median (rank order) size
SD	Mid-range (rank order) size
SR	Range (rank order) size

ISO/TC 213

Date: 2009-12-01

ISO 1101:2004/FDAM 1:2009(E)

ISO/TC 213/WG

Secretariat: DS

Geometrical product specification (GPS) — Geometrical tolerancing — Tolerancing of form, orientation, location and run-out — Amendment 1: Representation of specifications in the form of a 3D model

Spécification géométrique des produits (GPS) — Tolérancement géométrique — Tolérancement de forme, orientation, position et battement — Amendement 1: Représentation des spécifications sous forme d'un modèle 3D

Introduction

In the current ISO GPS standards, only 2D drawing indications are standardized.

The main issue of this amendment is to provide the possibility of using 3D representations as the basis for contracts and information exchanges between suppliers and purchasers instead of 2D drawings. One of the primary advantages is the avoidance of duplication and management of data consistency between 2D and 3D for companies that base their design work on a 3D master model.

Current ISO standards use the plane of projection of 2D drawings as part of the definition of certain requirements; the "intersection plane" developed in this amendment is the 3D equivalent. This intersection plane is purely a substitute for the plane of projection of 2D drawings

Several characteristics are foreseen to be indicated on 3D models, but may be indicated on 2D drawings as well, e. g. intersection plane.

ISO 1101: 2004 Amendment 1

Dimensions in millimetres

Definition of the tolerance zone	Indication and explanation
18.1 Straightness tolerance (see ISO/TS 12780-1 and ISO/TS 12780-2)	
The tolerance zone, in the considered plane, is limited by two parallel straight lines a distance t apart and in the specified direction only. 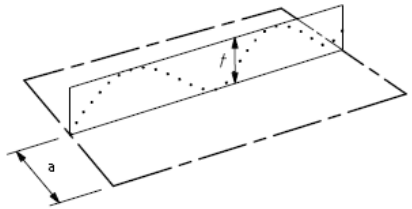 [a] Any distance. **Figure 57**	Any extracted (actual) line on the upper surface, parallel to the plane of projection in which the indication is shown, shall be contained between two parallel straight lines 0,1 apart. 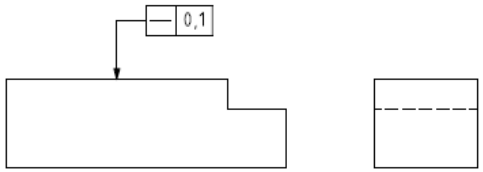 **Figure 58**

ISO 1101: 2004

		Indication and explanation in 3D
18.1 Straightness tolerance		
		Any extracted (actual) line on the upper surface, parallel to datum plane A, as specified by the intersection plane indicator, shall be contained between two parallel straight lines 0,1 apart. 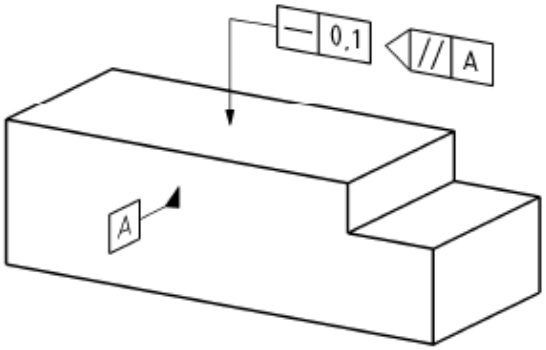 **Figure 58(3D)**

ISO 1101: 2004 AM1

The GD&T language will get richer by an order of magnitude (ISO 1101:2004 Amd 2)

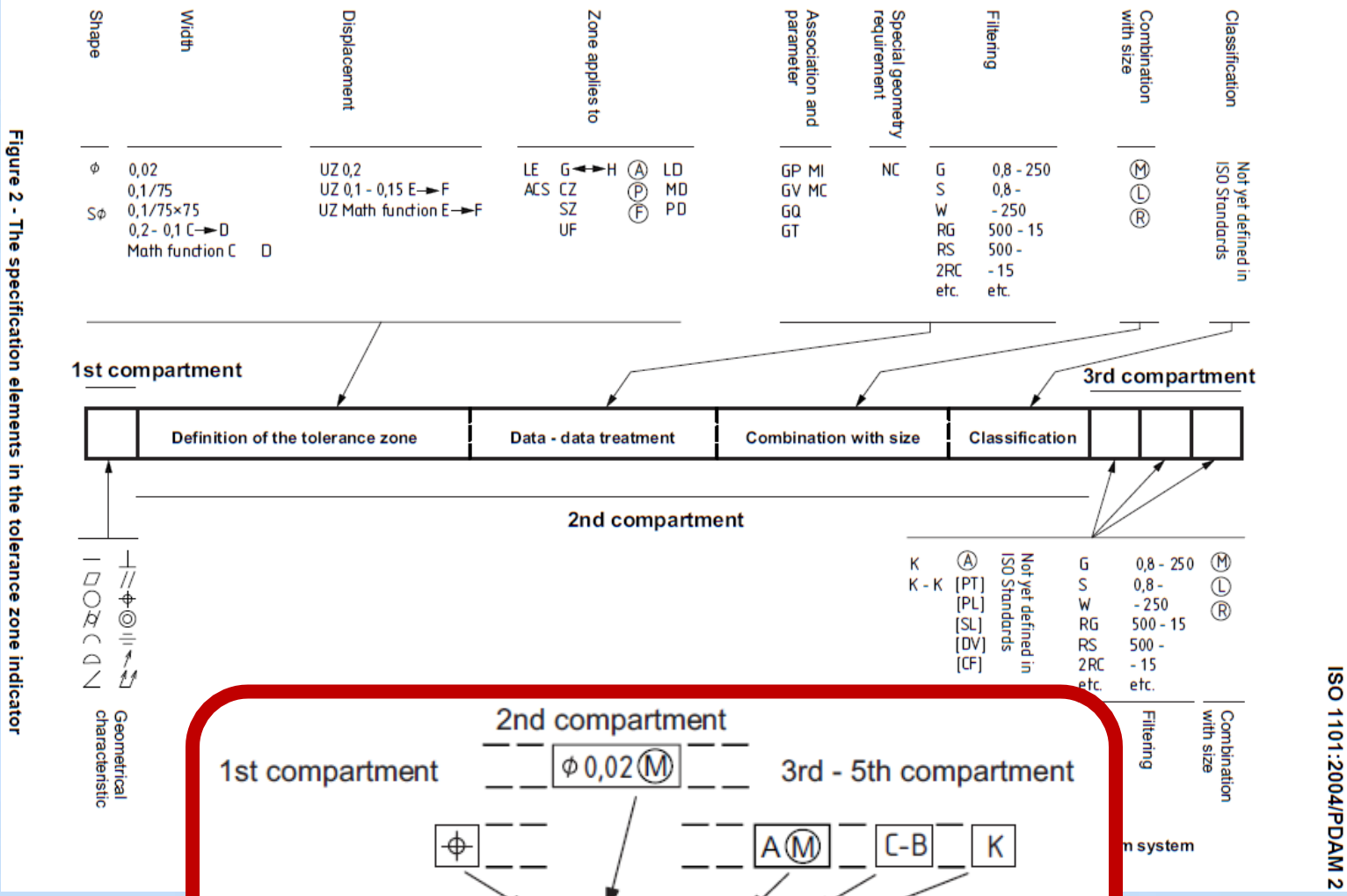

Figure 2 - The specification elements in the tolerance zone indicator

New symbols (syntax) require new definitions of their meaning (semantics)

ISO special specification elements for form

Table X.1 — Parameter and association symbols

Symbol	Description
GP	Gaussian (Least squares) association reference-to-peak parameter
GV	Gaussian (Least squares) association reference-to-valley parameter
GQ	Gaussian (Least squares) association root mean square parameter
GT	Gaussian (Least squares) association peak-to-valley parameter
MI	Maximum inscribed association[1] (peak-to-valley parameter)
MC	Minimum circumscribed association[1] (peak-to-valley parameter)

1 Only applies to roundness and cylindricity.

Symbol	Definition of the tolerance zone	Indication and explanation
	18.2 Flatness tolerance (see ISO/TS 12781-1 and ISO/TS 12781-2)	
▱	The tolerance zone is limited by two parallel planes a distance *t* apart. 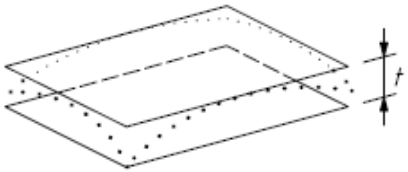 **Figure 63**	The extracted (actual) surface shall be contained between two parallel planes 0,08 apart. 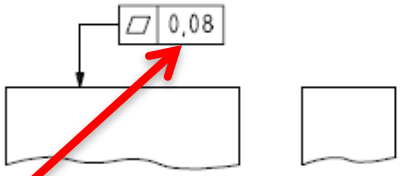 **Figure 64**

0,02 GQ

Semantics ?

ASME vs ISO: Where do we stand?

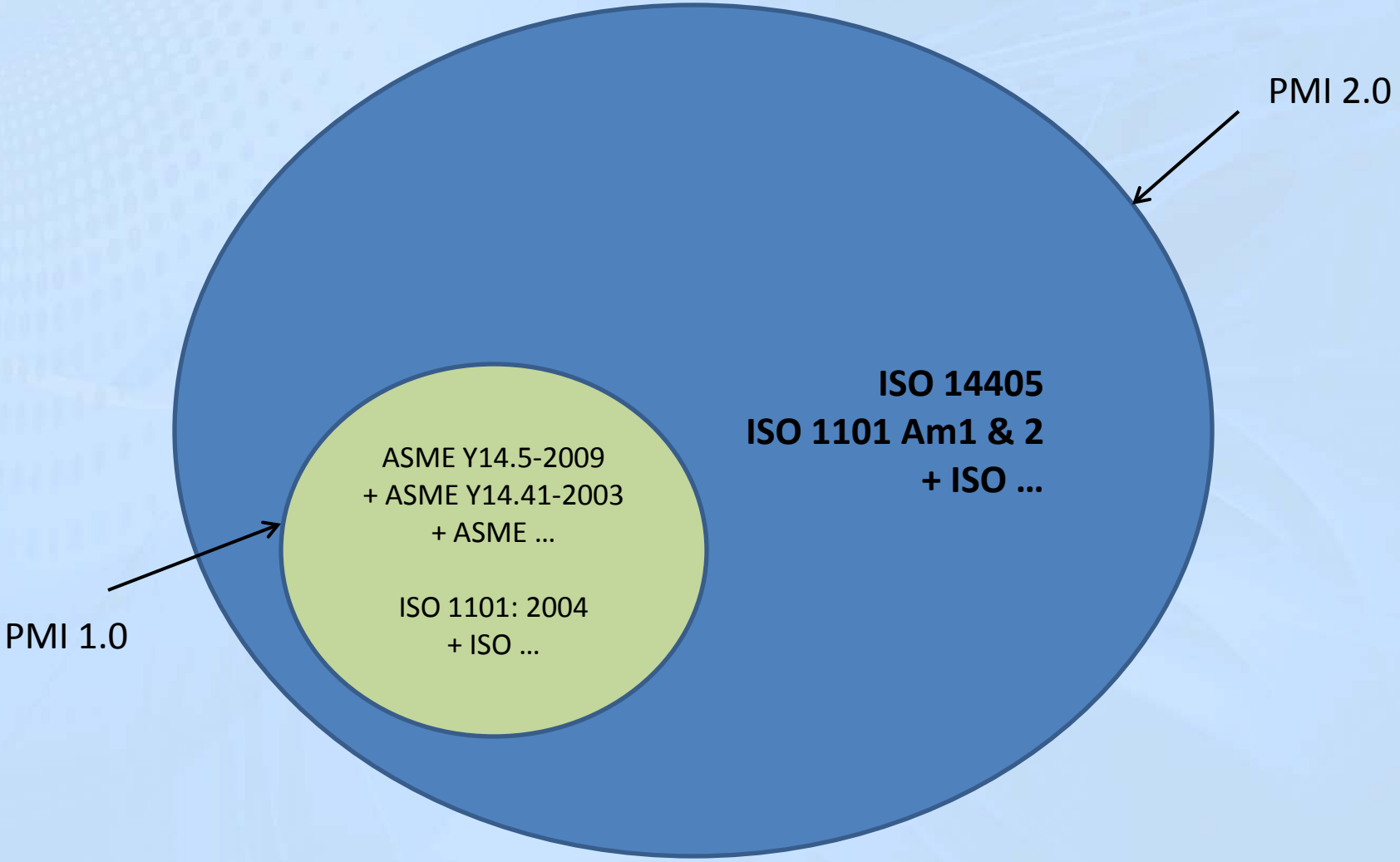

Thank You!

Q & A